AEROPRO

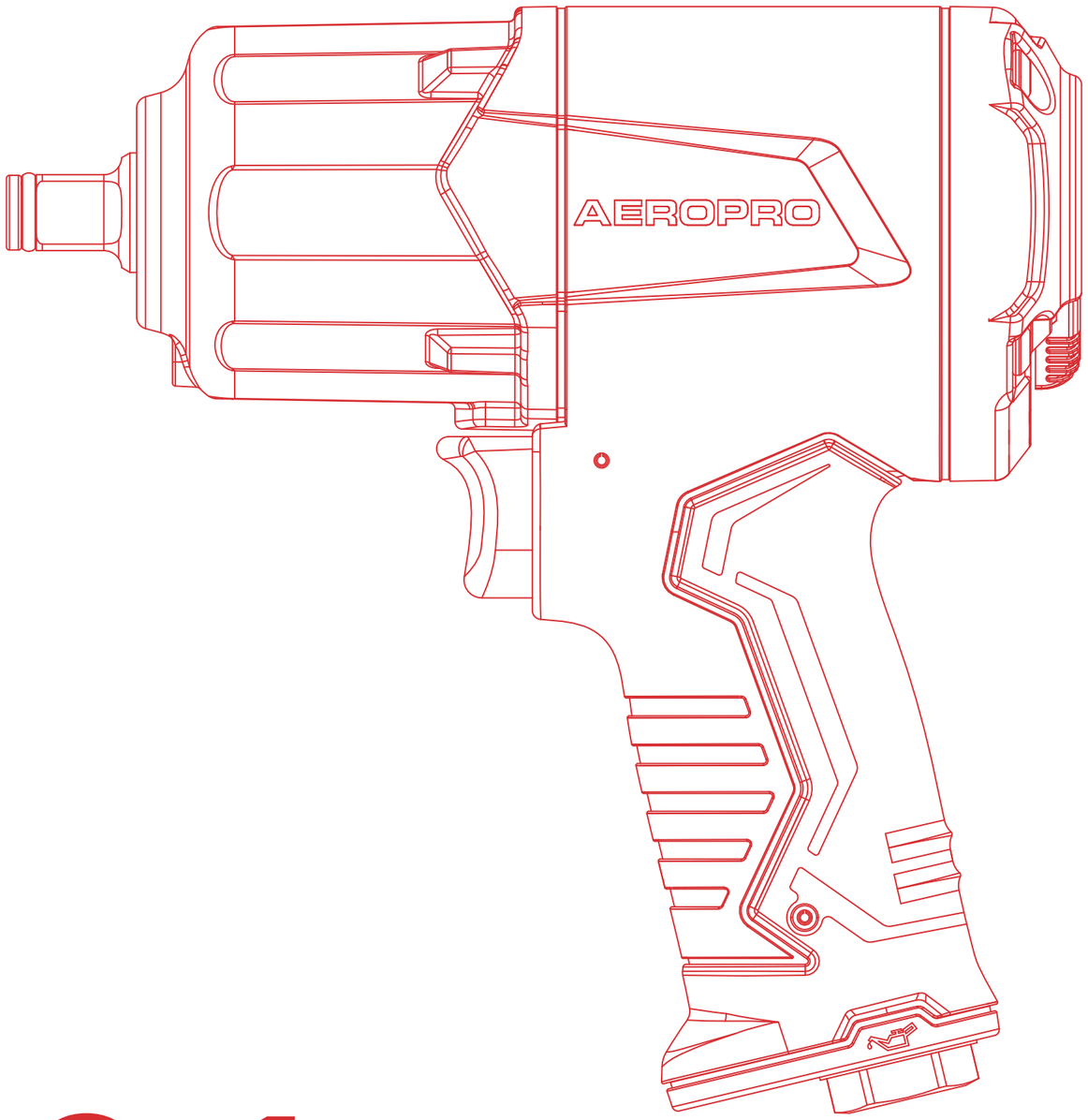

01 AIR TOOLS

01 AIR TOOLS

WHY CHOOSE PNEUMATIC TOOLS?

RAW POWER: Superior force for cutting, grinding, and fastening.

LIGHT WEIGHT: Reduces user fatigue, increases precision.

DURABLE: Minimal maintenance, built for industrial abuse.

COST-EFFECTIVE: Lower long-term cost per hour of operation.

VERSATILE: One compressor powers an entire workshop of tools.

SAFE: No risk of electric shock and motor-safe overload protection.

AIR IMPACT WRENCH

1/2" A316
Air Impact Wrench

NEW

Forward Switch
3 Speed Control

FEATURES

Light weight | powerful | Durable

APPLICATIONS

Tire Shops | Auto Shops | General Mechanics

Model NO.	Size		Nm (Ft-lbs)	Nm (Ft-lbs)	Nm (Ft-lbs)	Rpm
A316	1/2"	M20	950 (700)	1500 (1110)	1750 (1290)	7500

Air inlet	Air Hose	Kg (Lbs)	l/min (cfm)	db(A)	pcs	mm
1/4"	3/8"	2.4 (4.6)	200 (7)	108.4	10	450*400*215

1/2" A317
Air Impact Wrench

NEW

FEATURES

Light weight | powerful | Durable

APPLICATIONS

Tire Shops | Auto Shops | General Mechanics

Model NO.	Size		Nm (Ft-lbs)	Nm (Ft-lbs)	Nm (Ft-lbs)	Rpm
A317	1/2"	M14	630 (470)	850 (630)	1200 (885)	10500

Air inlet	Air Hose	Kg (Lbs)	l/min (cfm)	db(A)	pcs	mm
1/4"	3/8"	2.4 (5.2)	140 (5)	113.1	10	440*215*380

3/4" A319
Air Impact Wrench

NEW

FEATURES

Light weight | powerful | Durable

APPLICATIONS

Tire Shops | Auto Shops | General Mechanics

Model NO.	Size		Nm (Ft-lbs)	Nm (Ft-lbs)	Nm (Ft-lbs)	Rpm
A319	3/4"	M24	1400 (1030)	2000 (1475)	2300 (1700)	6500

Air inlet	Air Hose	Kg (Lbs)	l/min (cfm)	db(A)	pcs	mm
1/4"	3/8"	2.0 (4.4)	290 (10)	103.2	5	510*290*245

AEROPRO

1/2" A315
Air Impact Wrench

HOT!

Forward Switch
3 Speed Control

FEATURES

Light weight | powerful | Durable

APPLICATIONS

Tire Shops | Auto Shops | General Mechanics

Model NO.	Size		Nm (Ft-lbs)	Nm (Ft-lbs)	Nm (Ft-lbs)	Rpm
A315	1/2"	M18	850 (630)	1150 (850)	1650 (1220)	8000

Air inlet	Air Hose	Kg（Lbs）	l/min（cfm）	db(A)	pcs	mm
1/4"	3/8"	2.1 (4.6)	185 (6.5)	108.4	10	450*400*215

1/2" A398
Air Impact Wrench

HOT!

KNOB ADJUSTMENT

FEATURES

Light weight | powerful | Durable

APPLICATIONS

Tire Shops | Auto Shops | General Mechanics

Model NO.	Size		Nm (Ft-lbs)	Nm (Ft-lbs)	Nm (Ft-lbs)	Rpm
A398	1/2"	M18	850 (670)	1150 (850)	1650 (1220)	7800

Air inlet	Air Hose	Kg (Lbs)	l/min (cfm)	db(A)	pcs	mm
1/4"	3/8"	2.4 (5.2)	185 (6.5)	113.1	10	440*220*410

1/2" A301
Air Impact Wrench

FEATURES

Light weight | powerful | Durable

APPLICATIONS

Tire Shops | Auto Shops | General Mechanics

Model NO.	Size		Nm (Ft-lbs)	Nm (Ft-lbs)	Nm (Ft-lbs)	Rpm
A301	1/2"	M18	900 (670)	1350 (1000)	1600 (1200)	7000

Air inlet	Air Hose	Kg (Lbs)	l/min (cfm)	db(A)	pcs	mm
1/4"	3/8"	2.0 (4.4)	185 (6.5)	103.2	10	440*400*205

AEROPRO

1/2" AP17407
Air Impact Wrench

FEATURES

Light weight | powerful | Durable

APPLICATIONS

Tire Shops | Auto Shops | General Mechanics

Model NO.	Size		Nm (Ft-lbs)	Nm (Ft-lbs)	Nm (Ft-lbs)	Rpm
AP17407	1/2"	M16	610 (450)	850 (630)	1200 (900)	7800

Air inlet	Air Hose	Kg（Lbs）	l/min（cfm）	db(A)	pcs	mm
1/4"	3/8"	2.1 (4.6)	185 (6.5)	106.1	10	475*235*430

1/2" AP7430
Air Impact Wrench

FEATURES

Light weight | powerful | Durable

APPLICATIONS

Tire Shops | Auto Shops | General Mechanics

Model NO.	Size		Nm (Ft-lbs)	Nm (Ft-lbs)	Nm (Ft-lbs)	Rpm
AP7430	1/2"	M16	570 (420)	800 (590)	1150 (850)	7500

Air inlet	Air Hose	Kg (Lbs)	l/min (cfm)	db(A)	pcs	mm
1/4"	3/8"	2.7 (5.9)	140 (5)	/	10	490*265*282

1/2" AP7445
Air Impact Wrench

FEATURES

Light weight | powerful | Durable

APPLICATIONS

Tire Shops | Auto Shops | General Mechanics

Model NO.	Size		Nm (Ft-lbs)	Nm (Ft-lbs)	Nm (Ft-lbs)	Rpm
AP7445	1/2"	M16	800 (850)	1350 (1050)	1500 (1100)	7000

Air inlet	Air Hose	Kg (Lbs)	l/min (cfm)	db(A)	pcs	mm
1/4"	3/8"	2.7 (5.9)	200 (7)	104.9	5	433*250*240

AEROPRO

3/4" AP7462
Air Impact Wrench

Square Drive : 1"

AP7462A

FEATURES

Light weight | powerful | Durable

APPLICATIONS

Tire Shops | Auto Shops | General Mechanics

Model NO.	Size		Nm (Ft-lbs)	Nm (Ft-lbs)	Nm (Ft-lbs)	RPM Rpm
AP7462	3/4"	M30	1600 (1200)	2000 (1500)	2400 (1800)	4600

Air inlet	Air Hose	Kg（Lbs）	l/min（cfm）	db(A)	pcs	mm
1/2"	3/8"	6.8 (15.1)	565 (20)	101	2	355*260*300

AEROPRO

1/4" AP17414
Air Ratchet Wrench

3/8"

FEATURES

Light weight | powerful | Durable

APPLICATIONS

Tire Shops | Auto Shops | General Mechanics

Model NO.	Size		Nm (Ft-lbs)	Nm (Ft-lbs)	" (mm)	RPM Rpm
AP17414	1/4" 3/8"	/	35 (26)	/	8.18" (208)	230

Air inlet	Air Hose	Kg（Lbs）	l/min（cfm）	db(A)	pcs	mm
1/4"	3/8"	0.6 (1.3)	75 (2.7)	98.5	20	425*250*225

3/8" AP17411
Air Ratchet Wrench

1/2"

FEATURES

Light weight | powerful | Durable

APPLICATIONS

Tire Shops | Auto Shops | General Mechanics

Model NO.	Size		Nm (Ft-lbs)	Nm (Ft-lbs)	" (mm)	RPM Rpm
AP17411	3/8" 1/2"	/	67.5 (50)	/	11" (280)	160

Air inlet	Air Hose	Kg（Lbs）	l/min（cfm）	db(A)	pcs	mm
1/4"	3/8"	1.2 (2.6)	115 (4)	100.5	20	378*325*260

IMPACT WRENCH

1" A312
Air Impact Wrench

FEATURES

- Light weight
- powerful
- Durable

APPLICATIONS

- Tire Shops
- Auto Shops
- General Mechanics

Model NO.	Size		Nm (Ft-lbs)	Nm (Ft-lbs)	Nm (Ft-lbs)	Rpm	Air inlet	Air Hose	Kg (Lbs)	l/min (cfm)	db(A)	pcs	mm
A312	1"	M36	2600 (1950)	3600 (2700)	3900 (2900)	4000	1/2"	1/2"	11.7 (25.7)	1200 (42)	108.3	2	625*260*315

1" AP7463
Air Impact Wrench

FEATURES

- Light weight
- powerful
- Durable

APPLICATIONS

- Tire Shops
- Auto Shops
- General Mechanics

Model NO.	Size		Nm (Ft-lbs)	Nm (Ft-lbs)	Nm (Ft-lbs)	Rpm	Air inlet	Air Hose	Kg (Lbs)	l/min (cfm)	db(A)	pcs	mm
AP7463	1"	M34	2000 (1500)	3000 (2200)	3300 (2450)	6000	1/2"	5/8"	7.8 (17.1)	630 (22)	103.5	2	415*215*305

1" AP9563
Air Impact Wrench

FEATURES

- Light weight
- powerful
- Durable

APPLICATIONS

- Tire Shops
- Auto Shops
- General Mechanics

Model NO.	Size		Nm (Ft-lbs)	Nm (Ft-lbs)	Nm (Ft-lbs)	Rpm	Air inlet	Air Hose	Kg (Lbs)	l/min (cfm)	db(A)	pcs	mm
AP9563	1"	M34	2000 (1500)	3000 (2200)	3300 (2450)	6000	1/2"	5/8"	8.6 (18.9)	630 (22)	104.5	2	540*240*300

AEROPRO

1" AP7465
Air Impact Wrench

FEATURES

powerful · Durable

APPLICATIONS

Tire Shops · Auto Shops · General Mechanics

Model NO.	Size		Nm (Ft-lbs)	Nm (Ft-lbs)	Nm (Ft-lbs)	Rpm	Air inlet	Air Hose	Kg (Lbs)	l/min (cfm)	db(A)	pcs	mm
AP7465	1"	M42	2700 (2000)	3700 (2750)	4000 (2950)	4000	1/2"	1/2"	15.5 (34.2)	1140 (40)	112.3	2	720*255*355

1" AP7488
Air Impact Wrench

HOT!

FEATURES

powerful · Durable

APPLICATIONS

Tire Shops · Auto Shops · General Mechanics

Model NO.	Size		Nm (Ft-lbs)	Nm (Ft-lbs)	Nm (Ft-lbs)	Rpm	Air inlet	Air Hose	Kg (Lbs)	l/min (cfm)	db(A)	pcs	mm
AP7488	1"	M45	3000 (2200)	4000 (2950)	4400 (3250)	3600	1/2"	5/8"	16.3 (35.9)	1140 (40)	108.7	2	720*255*355

1" AP7495
Air Impact Wrench

FEATURES

powerful · Durable

APPLICATIONS

Tire Shops · Auto Shops · General Mechanics

Model NO.	Size		Nm (Ft-lbs)	Nm (Ft-lbs)	Nm (Ft-lbs)	Rpm	Air inlet	Air Hose	Kg (Lbs)	l/min (cfm)	db(A)	pcs	mm
AP7495	1"	M48	3400 (2500)	4800 (3550)	5000 (3700)	2800	1/2"	5/8"	18.9 (41.6)	1225 (43)	108.5	1	720*255*185

AIR DIE GRINDER

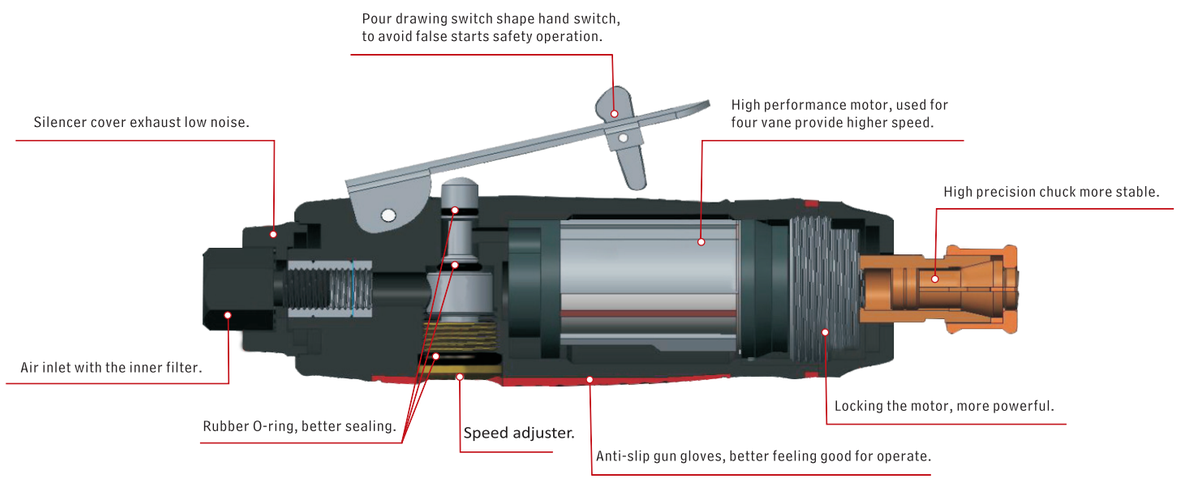

AIR DIE GRINDER

1/4" AP17313

Air Die Grinder

FEATURES

- Light weight
- Low Vibration
- Durable

APPLICATIONS

- Tire Shops
- Auto Shops
- Work Shops

Model NO.	Size	" (mm)	Rpm	Air inlet	Air Hose	Kg (Lbs)	l/min (cfm)	db(A)	pcs	mm
AP17313	1/4" 1/8"	5.9" (151)	25000	1/4"	3/8"	0.32 (0.7)	85 (3)	102.0	20	430*191*225

1/4" AP17314

Air Die Grinder

FEATURES

- Light weight
- Low Vibration
- Durable

APPLICATIONS

- Tire Shops
- Auto Shops
- Work Shops

Model NO.	Size	" (mm)	Rpm	Air inlet	Air Hose	Kg (Lbs)	l/min (cfm)	db(A)	pcs	mm
AP17314	1/4" 1/8"	7.0" (180)	22000	1/4"	3/8"	0.54 (1.2)	130 (4.5)	97.1	20	347*210*265

1/4" AP17315

Air Angle Die Grinder

FEATURES

- Light weight
- Low Vibration
- Durable

APPLICATIONS

- Tire Shops
- Auto Shops
- Work Shops

Model NO.	Size	" (mm)	Rpm	Air inlet	Air Hose	Kg (Lbs)	l/min (cfm)	db(A)	pcs	mm
A17315	1/4" 1/8"	6.1" (156)	20000	1/4"	3/8"	0.45 (0.99)	85 (3)	99.1	20	385*204*275

AIR DRILL

AP7318

Air Die Grinder

FEATURES

- Light weight
- Low Vibration
- Durable

APPLICATIONS

- Auto Shops
- Work Shops

Model NO.	Grinder Cap	" (mm)	Rpm	Air inlet	Air Hose	Kg (Lbs)	l/min (cfm)	db(A)	pcs	mm
AP7318	1/8"	/	54000	1/4"	3/8"	0.32 (0.7)	57 (2)	79.5	20	422*230*315

3/8" AP17101

Air Reversible Drill

FEATURES

- Light weight
- powerful
- Durable

APPLICATIONS

- Auto Shops
- Work Shops

Model NO.	Size	" (mm)	Rpm	Air inlet	Air Hose	Kg (Lbs)	l/min (cfm)	db(A)	pcs	mm
AP17101	3/8"	6.7" (170)	1800	1/4"	3/8"	0.94 (2.07)	115 (4)	102.5	10	319*222*287

1/2" AP17107

Air Reversible Drill

FEATURES

- Light weight
- powerful
- Durable

APPLICATIONS

- Auto Shops
- Work Shops

Model NO.	Size	" (mm)	Rpm	Air inlet	Air Hose	Kg (Lbs)	l/min (cfm)	db(A)	pcs	mm
AP17107	1/2"	7.67 (195)	700	1/4"	3/8"	1.4 (3.08)	115 (4)	101.9	10	310*255*315

AIR HAMMER/CUT OFF TOOL

AP17621

Air Hammer(Side Exhaust)

FEATURES

- Light weight
- Low Vibration
- Durable

APPLICATIONS

- Auto Shops
- Work Shops

Model NO.	Chisel Shank	" (mm)	Rpm	Air inlet	Air Hose	Kg (Lbs)	l/min (cfm)	db(A)	pcs	mm
AP17621	2/5"	5.5 (140)	4500	1/4"	3/8"	0.98 (2.16)	80 (2.8)	106.8	10	325*220*305

3" AP17620

Air Cut Off Tool

FEATURES

- Light weight
- Low Vibration
- Durable

APPLICATIONS

- Auto Shops
- Work Shops

Model NO.	Cutting Disc	" (mm)	Rpm	Air inlet	Air Hose	Kg (Lbs)	l/min (cfm)	db(A)	pcs	mm
AP17620	3"	7.0" (180)	18000	1/4"	3/8"	0.7 (1.54)	128 (4.5)	90.4	20	475*230*385

AIR BODY SAW/NEEDLE SCALER

AP7601

Air Body Saw

FEATURES

- Light weight
- Low Vibration
- Durable

APPLICATIONS

- Auto Shops
- Work Shops

Model NO.	Max.Material Thickness	mm	Strokes Per Minute spm	Air inlet	Air Hose	Kg（Lbs）	l/min（cfm）	db(A)	pcs	mm
AP17601	1.5mm	8-10	5000	1/4"	3/8"	0.72 (1.58)	115 (4)	91.6	20	435*305*200

AP7658

Needle Scaler

FEATURES

- Light weight
- Low Vibration
- Durable

APPLICATIONS

- Auto Shops
- Work Shops

Model NO.	Blow Per Min	Needle quantity	Bore Diameter " (mm)	Air inlet	Air Hose	Kg（Lbs）	l/min（cfm）	db(A)	pcs	mm
AP7658	4500Bpm	19 needles	3/4" (19mm)	1/4"	3/8"	1.97 (4.33)	79.2 (2.8)	112.5	10	405*375*290

AEROPRO

AIR SANDER

AEROPRO

A302
Dust Extractor

FEATURES

powerful
Durable

APPLICATIONS

Body Shops

Weight	53kg	Voltage	220V/50Hz
Power	1600W	Dust Collecting	30L
Outer box size	600*375*675mm	Barrel	
Outer box size	680*385*130mm	Packing Quantity	1pcs

6" A313
Random Orbital Sander(Central vacuum)

FEATURES

High Rpm
Low Vibration
Durable

APPLICATIONS

Body Shops
Work Shops

Model NO.	Sanding pad " (mm)	orbit " (mm)	Rpm	Air inlet	Air Hose	Kg (Lbs)	l/min（cfm）	db(A)	pcs	mm
A313	6" (150)	3mm/5mm	10000	1/4"	3/8"	0.93 (2.05)	130 (4.5)	82.7	10	508*410*260

6" A313S
Random Orbital Sander(Self Vaccum)

FEATURES

High Rpm
Low Vibration
Durable

APPLICATIONS

Body Shops
Work Shops

Model NO.	Sanding pad " (mm)	orbit " (mm)	Rpm	Air inlet	Air Hose	Kg (Lbs)	l/min（cfm）	db(A)	pcs	mm
AP313S	6" (150)	3mm/5mm	10000	1/4"	3/8"	0.93 (2.05)	130 (4.5)	82.7	10	508*410*260

AEROPRO

6" A313N
Random Orbital Sander

FEATURES

High Rpm
Low Vibration
Durable

APPLICATIONS

Body Shops
Work Shops

Model NO.	Sanding pad " (mm)	orbit " (mm)	Rpm	Air inlet	Air Hose	Kg (Lbs)	l/min（cfm）	db(A)	pcs	mm
A313N	6" (150)	3mm/5mm	10000	1/4"	3/8"	0.93 (2.05)	128 (4.5)	82.7	10	508*410*260

3" AP7333
Random Orbital Sander

FEATURES

High Rpm
Low Vibration
Durable

APPLICATIONS

Body Shops
Work Shops

Model NO.	Sanding pad " (mm)	orbit " (mm)	Rpm	Air inlet	Air Hose	Kg (Lbs)	l/min（cfm）	db(A)	pcs	mm
AP7333	3" (75)	2.5mm	12000	1/4"	3/8"	0.7 (1.54)	130 (4.5)	/	10	680*170*215

5" AP7335
Random Orbital Sander

FEATURES

High Rpm
Low Vibration
Durable

APPLICATIONS

Body Shops
Work Shops

Model NO.	Sanding pad " (mm)	orbit " (mm)	Rpm	Air inlet	Air Hose	Kg (Lbs)	l/min（cfm）	db(A)	pcs	mm
AP7335	5" (125)	3mm/5mm	12000	1/4"	3/8"	0.84 (1.85)	130 (4.5)	94.8	10	680*170*215

5" A7335S
Random Orbital Sander

FEATURES

High Rpm · Low Vibration · Durable

APPLICATIONS

Body Shops · Work Shops

Model NO.	Sanding pad " (mm)		RPM Rpm	Air inlet	Air Hose	Kg (Lbs)	l/min (cfm)	db(A)	pcs	mm
AP7335S	5" (125)	5mm/3mm	12000	1/4"	3/8"	0.89 (1.95)	130 (4.5)	99.8	10	535*330*470

6" AP7336
Random Orbital Sander

FEATURES

High Rpm · Low Vibration · Durable

APPLICATIONS

Body Shops · Work Shops

Model NO.	Sanding pad " (mm)		RPM Rpm	Air inlet	Air Hose	Kg (Lbs)	l/min (cfm)	db(A)	pcs	mm
AP7336	6" (150)	5mm/3mm	12000	1/4"	3/8"	0.86 (1.89)	130 (4.5)	95.4	10	335*180*515

6" AP7336S
Random Orbital Sander

FEATURES

High Rpm · Low Vibration · Durable

APPLICATIONS

Body Shops · Work Shops

Model NO.	Sanding pad " (mm)		RPM Rpm	Air inlet	Air Hose	Kg (Lbs)	l/min (cfm)	db(A)	pcs	mm
AP7336S	6" (150)	5mm/3mm	12000	1/4"	3/8"	0.92 (2.0)	130 (4.5)	97.8	10	535*330*470

6" AP17316
Random Orbital Sander

FEATURES

High Rpm · Low Vibration · Durable

APPLICATIONS

Body Shops · Work Shops

Model NO.	Sanding pad " (mm)		RPM Rpm	Air inlet	Air Hose	Kg (Lbs)	l/min (cfm)	db(A)	pcs	mm
AP17316	6" (150)	10mm	11200	1/4"	3/8"	1.84 (4.04)	140 (5)	97.7	10	440*275*320

4" AP7319
Air Angle Sander

FEATURES

High Rpm · Low Vibration · Durable

APPLICATIONS

Auto shops · Work Shops

Model NO.	Sanding pad " (mm)		RPM Rpm	Air inlet	Air Hose	Kg (Lbs)	l/min (cfm)	db(A)	pcs	mm
AP7319	4"/5" (100/125)	/	10000	1/4"	3/8"	1.3 (2.86)	140 (5.0)	95.8	10	515*260*320

AP7322
Belt Sander

FEATURES

High Rpm · Low Vibration · Durable

APPLICATIONS

Auto shops · Work Shops

Model NO.	Sanding Belt (mm)		RPM Rpm	Air inlet	Air Hose	Kg (Lbs)	l/min (cfm)	db(A)	pcs	mm
AP7322	(10/12)x330	/	16000	1/4"	3/8"	0.85 (1.87)	140 (5.0)	93	10	455*355*125

AIR TOOLS KITS

AIR TOOLS KITS

17PCS 1/2"Impact Wrench Kits
AP17808-A (A398)

SPECIFICATIONS

- 1pc A398 1/2" Impact Wrench
- 10pcs Impact Sockets (9,10,11,13,14,17,19,22,24,27mm)
- 1pc 5" Extention Bar
- 1pc Oil Pot
- 1pc Hex Wrench
- 1pc Mini Oiler
- 1pc Quick Coupler
- 1pc Blow Case

17PCS 1/2"Impact Wrench Kits
AP17808-A (A301)

SPECIFICATIONS

- 1pc A301 1/2" Impact Wrench
- 10pcs Impact Sockets (9,10,11,13,14,17,19,22,24,27mm)
- 1pc 5" Extention Bar
- 1pc Oil Pot
- 1pc Hex Wrench
- 1pc Mini Oiler
- 1pc Quick Coupler
- 1pc Blow Case

AP17808-A

17pcs 1/ 2" Impact Wrench Kits
Contents:
1pc A315½" Impact Wrench
10 pcs Impact Sockets
(9, 10, 11, 13, 14, 17, 19, 22, 24, 27mm)
1 pc 5" Extentsion Bar
1 pc Oil pot
1 pc Hex Wrench
1 pc Mini Oiler
1 pc quick coupler
1pc Blow Case

AP7805

17pcs 3/8" Ratchet Wrench Kits
Contents:
1pc AP17411 3/8" Ratchet Wrench
7pcs Impact Sockes
(9,10,11,13,14,17,19mm)
1pc 1/2"x3" Extentsion Bar
1pc U-Joint
1pc Oil Pot
3pc Bits
1pc Nipple
1pc Adaptor
1pc Blow Case

AP17814

16pcs Die Grinder Kits
Contents:
1pc AP17314 1/4" (6mm)
Die Grinder
2pcs Hand Wrenches
10pcs (5pcs 1/4"(6mm) and 5pcs
1/8" (3mm))Grinding stones)
1pc quick coupler
1pc 1/8" chuck
1pc oil pot

AP7810

20pcs 3/8" Air Drill Kits
Contents:
1pc AP17101 3/8" Reversible Air Drill
7pcs Bits
10pcs Drilling Caps
(1.5, 2, 2.5, 3, 3.5,
4, 4.5, 5, 5.5, 6mm)
1pc Oil Pot
1pc Blow Case

AP7871

Contents:

1pc AP17407 Impact Wrench
1pc AP17411 Ratchet Wrench
1pc AP17621 Air Hammer
1pc AP17313 Air Die Grinder
1pc RP8204 Air Blow Gun
8pcs Sockets(1/2"):9/16", 1/2", 3/4",5/8",
11mm,12mm,13mm,17mm
1pc 3/8"&1/2" Socket Convert Connector
1pc Screw Bit Convert Connector
Ipc Female Coupler
10pcs Grinding Stones
10pcs Grinding Sleeves
9pcs Screw Bits
2pcs Wrencher
1pc PTFE Tape

1pc Round chuck
1pc Safety Nose
1pc Tapered Nose
1pc 1/8" Chuck
1pc Rubber Abraser
1pc 4mm Spanner
1pc Oil Pot
5pcs Male Couplers
1pc Female Coupler
3pcs 25mm Chisel
1pc Blow Mould Case
1pc 1/4" Both Side Connector
1pc Spring
1pc Rubber Nose
1pc High Speed Nose
2pcs Needle

AP17813

16pcs Die Grinder Kits
Contents:
1pc AP17313 1/4" (6mm)
Die Grinder
2pcs Hand Wrenches
10pcs (5pcs 1/4"(6mm) and 5pcs
1/8" (3mm))Grinding stones)
1pc quick coupler
1pc 1/8" chuck
1pc oil pot

AP17803-A

16pcs Angle Die Grinder Kits
Contents:
1pc AP17315 1/4" (6mm) Angle
Die Grinder
2 pcs Hand Wrenches
10 pcs (5pcs 1/4" 6mm and 5pcs
1/8" 3mm Grinding Stones
1 pc quick coupler
1 pc 1/8"chuck
1 pc oil pot

AP7006

10pcs Impact Socket
11, 12, 13, 14, 16,
17, 19, 21, 22, 24, mm

AP7005-1

Sandpaper

5" 6-holes Sandpaper
Available Grits:80,120,
180,240,320,400,500,
600,800,1000,1200,1500

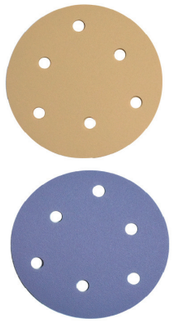

AP7005-2

Sandpaper

6" 17-holes Sandpaper
Available Grits:80,120,
180,240,320,400,500,
600,800,1000,1200,1500

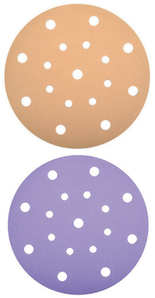

AP7001

Retaining Spring

AP7002

4pc Chisels

AP7008

2pcs Aluminum Oxide Disk

AP8055

Minin Oiler